- Fuji Burudon MFG. Okaya-shi, Nagano-ken, J-394-0002 JAPAN - August 2005

Unless otherwise specified: Dimensions are in Millimeters			
Nominal size			
0.5 - 3.0:	±0.05	Surface Finish:	
3.0 - 6.0:	±0.1	Radius:	
6.0 - 30:	±0.2	Corner:	
30 - 120:	±0.3	Liner:	
120 - 315:	±0.5	Angular:	±2°
315 - 1000:	±0.8		

Debur and Break Sharp Edges

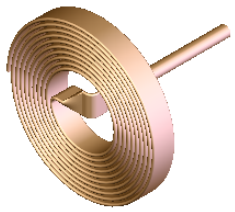

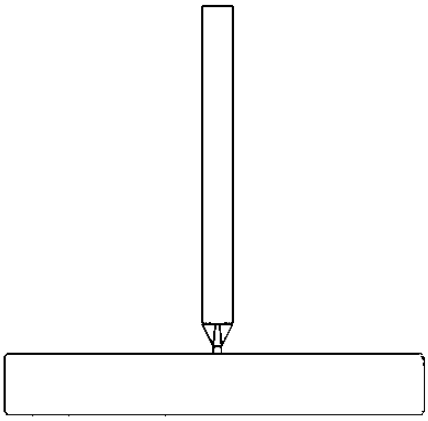

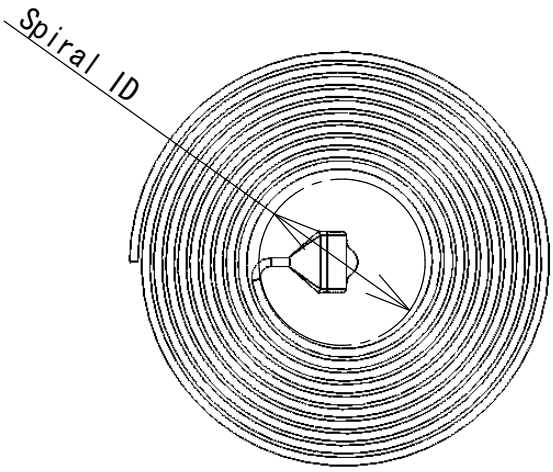

Scale (2:1)

Spiral tube will be designed for the specific use.
Please indicate the use, pressure range and degrees required in order to determine the material tube specification.

Pressure Range (MPa)	Spiral ID ±0.5mm	Tube Length ±1.0mm	Tube OD ±1.0mm	Tip Travel ±20°
0-40.0	7 - 8	250 - 400	1.5	150-180°
0-25.0	6.5 - 7	250	1.5 - 2.0	150-180°
0-1.0	6.5 - 7	160	1.5 - 2.0	150-180°

Parts Name: Spiral Tube

Material: C1720 CuBe2

Drawn: Kaz Miyasaka

Date: 2004/03/09

Drawing No. Spiral Tube

FUJI BURUDON MFG CO LTD

Proprietary and Confidential

The information contained in this drawing is the sole property of Fuji Burudon MFG. Any reproduction in part or as a whole without the written permission of Fuji Bururdon MFG. is prohibited.